RS4232-4 box is your final serial port interface solution

1. RS4232-4 box can support 4 sets RS232 interface to ground isolated RS232/RS422/RS485 interface.
2. You just need to set DIP switch to assign your target interface type for each port seperately.
3. You can use A640 cable between any RAYON's four port card(ex, P584U card) and RS4232-4 box to let one PC have 4 ground isolated RS232, RS422, RS485 interface available.

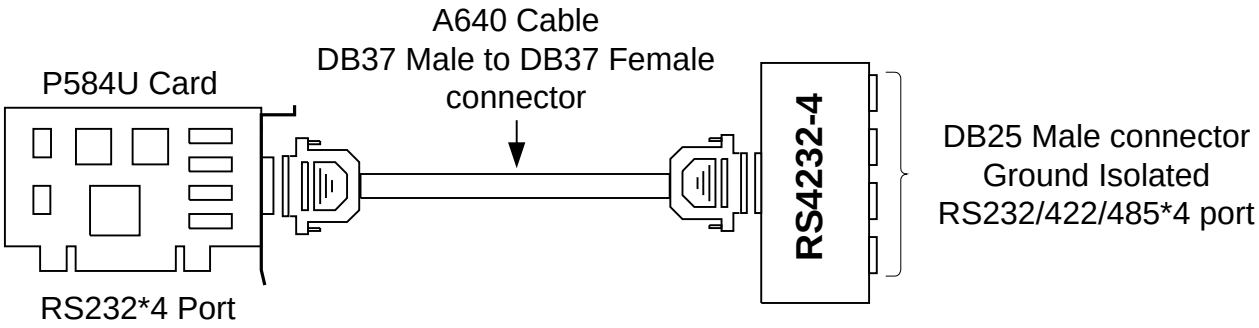
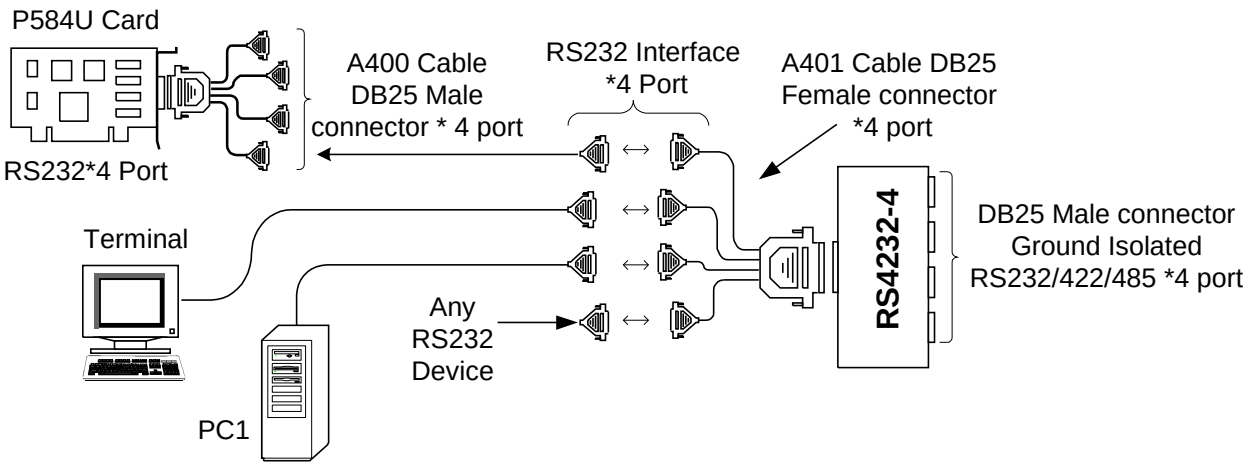
4. You can use A401 cable to connect with RS4232-4 box. So we can have 4 set RS232 to ground isolated RS232,RS422,RS485 interface convertor available. A401 cable will support four DB25 female connectors for common ground RS232 input.